Product Description

- UPVC plastic butterfly valve body with light weight, strong corrosion resistance, compact and beautiful appearance, light weight body easy to install, a wide range of applications, material hygiene without DU, wear-resistant, easy to disassemble, easy maintenance, suitable for fluid: water , air, oils, corrosive chemical liquids, etc.
- RPP -20°C~90°C
- UPVC -10°C~70°C
- CPVC -40°C~95°C
- PPH -20°C~95°C
- Valve body light weight, strong corrosion resistance
- Compact and beautiful appearance
- The body is light and easy to install
- High corrosion resistance, wide application range

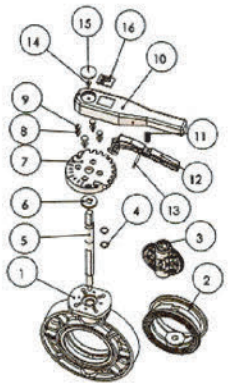

■UPVC Butterfly Valve Handle Material:

NO.	PARTS NAME	MATERIAL	QTY
1	Body	PVC\CPVC\PPG\PPH	1
2	Seat	EPDM\FPM	1
3	Body	PVC\CPVC\PPG\PPH	1
4	Disc	EPDM\FPM	2
5	O-Ring	SS304\SS316	1
6	Handle	ABS	1
7	Spring	SS304	1
8	Lever	ABS	1
9	Bearing	PP-GF	1

■Main Specification

Nominal Size	Operated Type	Work Pressure	Work Temperature	Seal Material	Disc/Body Material	Medium	Application	Connection Standard
DN50 ↓ 200	Pneumatic Actuator Electric Actuator Manual Hand Lever Worm Gear	PN0.6 PN1.0	-15-85℃	PTFE EPDM	UPVC CPV PPG FRPP PPH PP PP-R ABS	Potable Water Sewage High Purity Water	Chemical Industry Agriculture Pharmacy Environmental Protection	PN10/PN16 ANSI150 DIN16 JIS10K/16K

Manual Handle Lever Operated

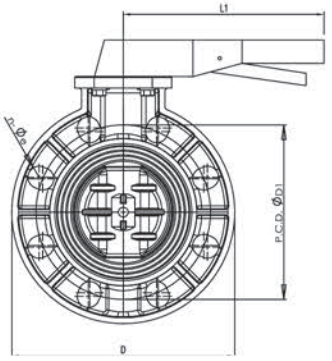

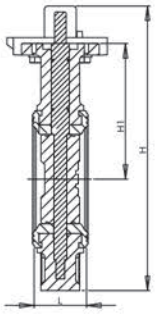

■Dimensions

unit: mm

Size		DIN		ANSI 150		JIS 10K		T	H1	L	L1	H	C1	E	F	4-C
DN	NPS	n-Φe	P.C.D.ΦD1	n-Φe	P.C.D.ΦD1	n-Φe	P.C.D.ΦD1									
50	2″	4-Φ19	125	4-Φ19	121	4-Φ19	120	12	100	43	190	223	140.5	65	50	4-7
65	2½″	4-Φ19	145	4-Φ19	140	4-Φ19	140	12	112	46	190	245	140.5	65	50	4-7
80	3″	8-Φ19	160	4-Φ19	152	8-Φ19	150	12	120	49	240	270	140.5	65	50	4-7
100	4″	8-Φ19	180	8-Φ19	191	8-Φ19	175	12	140	54	240	308	154	65	50	4-7
														90	70	4-10
125	5″	8-Φ19	210	8-Φ19	216	8-Φ19	210	15	168	64	310	352	154	90	70	4-10
150	6″	8-Φ23	240	8-Φ23	241	8-Φ23	240	15	181	70	310	382	186	90	70	4-10
200	8″	8-Φ23	295	8-Φ23	298	8-Φ23	290	15	215	88	–	–	186	125	102	4-12

Worm Gear Operated

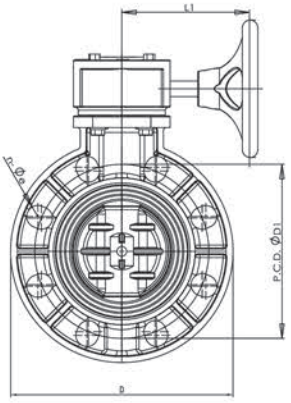

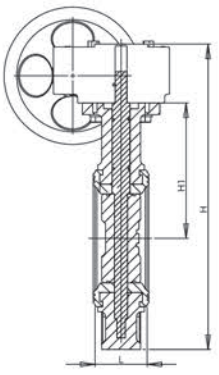

■Dimensions

unit: mm

Size		DIN		ANSI 150		JIS 10K		T	H1	L	L1	H	C1	E	F	4-C
DN	NPS	n-Φe	P.C.D.ΦD1	n-Φe	P.C.D.ΦD1	n-Φe	P.C.D.ΦD1									
50	2″	4-Φ19	125	4-Φ19	121	4-Φ19	120	12	100	43	99	228	140.5	65	50	4-7
65	2½″	4-Φ19	145	4-Φ19	140	4-Φ19	140	12	112	46	99	250	140.5	65	50	4-7
80	3″	8-Φ19	160	4-Φ19	152	8-Φ19	150	12	120	49	99	266	140.5	65	50	4-7
100	4″	8-Φ19	180	8-Φ19	191	8-Φ19	175	12	140	54	99	302	154	65	50	4-7
														90	70	4-10
125	5″	8-Φ19	210	8-Φ19	216	8-Φ19	210	15	168	64	115	351	154	90	70	4-10
150	6″	8-Φ23	240	8-Φ23	241	8-Φ23	240	15	181	70	115	389	186	90	70	4-10
200	8″	8-Φ23	295	8-Φ23	298	8-Φ23	290	15	215	88	220	487	186	125	102	4-12

Pneumatic Actuator Operated

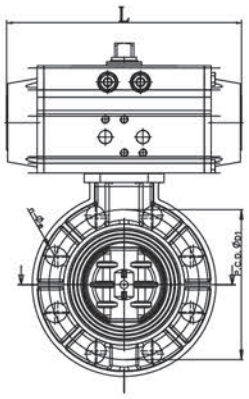

■Dimensions

unit: mm

Size		DIN		ANSI 150		JIS 10K		T	H1	L	L1	H	C1	E	F	4-C
DN	NPS	n-Φe	P.C.D.ΦD1	n-Φe	P.C.D.ΦD1	n-Φe	P.C.D.ΦD1									
50	2″	4-Φ19	125	4-Φ19	121	4-Φ19	120	12	100	139.5	43	276.5	71	65	50	4-7
65	2½″	4-Φ19	145	4-Φ19	140	4-Φ19	140	12	112	162	46	300.5	80.5	65	50	4-7
80	3″	8-Φ19	160	4-Φ19	152	8-Φ19	150	12	120	162	49	325.5	80.5	65	50	4-7
100	4″	8-Φ19	180	8-Φ19	191	8-Φ19	175	12	140	207	54	378	95	65	50	4-7
														90	70	4-10
125	5″	8-Φ19	210	8-Φ19	216	8-Φ19	210	15	168	237.5	64	432.5	106	90	70	4-10
150	6″	8-Φ23	240	8-Φ23	241	8-Φ23	240	15	181	271.5	70	483	123	90	70	4-10
200	8″	8-Φ23	295	8-Φ23	298	8-Φ23	290	15	215	328	88	565.5	137	125	102	4-12

Electric Actuator Operated

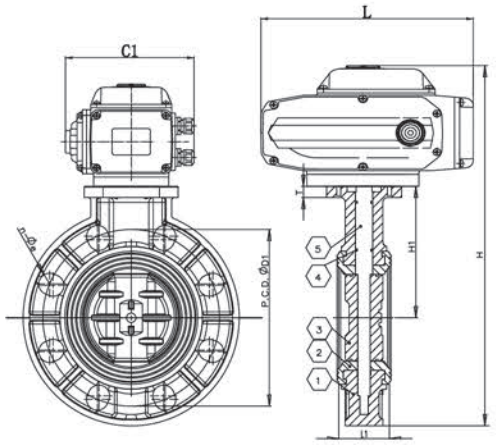

■Dimensions

unit: mm

Size		DIN		ANSI 150		JIS 10K		T	H1	L	L1	H	C1	E	F	4-C
DN	NPS	n-Φe	P.C.D.ΦD1	n-Φe	P.C.D.ΦD1	n-Φe	P.C.D.ΦD1									
50	2″	4-Φ19	125	4-Φ19	121	4-Φ19	120	12	100	165	43	317.5	140.5	65	50	4-7
65	2½″	4-Φ19	145	4-Φ19	140	4-Φ19	140	12	112	165	46	339.5	140.5	65	50	4-7
80	3″	8-Φ19	160	4-Φ19	152	8-Φ19	150	12	120	165	49	355.5	140.5	65	50	4-7
100	4″	8-Φ19	180	8-Φ19	191	8-Φ19	175	12	140	211.5	54	422.5	154	65	50	4-7
														90	70	4-10
125	5″	8-Φ19	210	8-Φ19	216	8-Φ19	210	15	168	211.5	64	465.5	154	90	70	4-10
150	6″	8-Φ23	240	8-Φ23	241	8-Φ23	240	15	181	259	70	527.5	186	90	70	4-10
200	8″	8-Φ23	295	8-Φ23	298	8-Φ23	290	15	215	259	88	594	186	125	102	4-12